EN Installation Manual SRD2PB



Warning!

High voltage. Risk of electric shock. Installation should only be performed by a qualified electrician. Ensure that the power supply is turned off to the sensor before connecting.

Sensor V-sense SRD2PB is an active Casambi-Ready PIR sensor (infrared presence sensor) with a built-in lux meter, DALI output, relay output, and two push-button inputs.

SRD2PB is designed so its multifunctionality enables complete control of most rooms without the need for other Casambi devices.

SRD2PB can control up to 20 DALI drivers (40mA) and break non-dimmable loads up to 10A (cos φ =1).

Detection pattern (m)

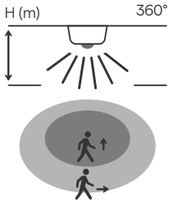

	Movement across	Movement towards	Stationary activity
Height (m)	Across (m)	Towards (m)	Stationary (m)
2,4	∅ 12	∅ 6	∅ 4
2,8	∅ 14	∅ 7,5	∅ 4
3,2	∅ 16	∅ 9	∅ 4
3,6	∅ 18	∅ 10	∅ 4
4	∅ 20	∅ 11,5	Not recommended
5	∅ 25	∅ 14,5	Not recommended

• In accordance with IEC 63180

Installation

This unit is designed to be mounted in the ceiling.

- Do not place the unit where direct sunlight can reach the sensor.
- Do not place the sensor within 1 meter of lighting, forced air heating, or ventilation.
- Do not attach the sensor to an unstable or vibrating surface.
- Movement is best detected when the ambient temperature differs from the human body's temperature, therefore use within -20 to 35°C for ambient temperature.
- For stationary work, installation directly above the workplace is recommended.

Recommendations for hole cutting

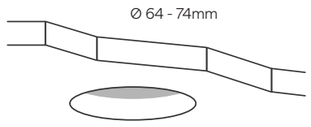

Hole cutting over 70mm requires sharp edges to prevent the hole from being visible.

Depending on the thickness of the ceiling, the position of the springs on the sensor can be moved to ensure optimal mounting.

Recommended spring position based on suspended ceiling thickness

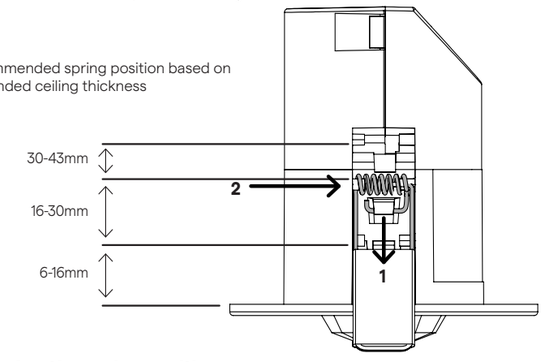

Changing the spring position

1. Remove the spring bend from the plastic hook by pressing it down.
2. Compress the spring from the right side and remove it from the left plastic peg.
3. For reassembly of the spring, perform steps 1 & 2 in reverse order.

Recommendations for cable stripping

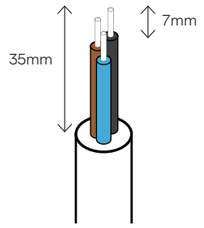

Wiring diagram

The X-terminal is intended as a crossover terminal.

Tip! Since the terminal is removable, it can be detached to easily connect the wiring separately from the sensor, and when everything is connected, the terminal can be pressed back into place in the sensor.

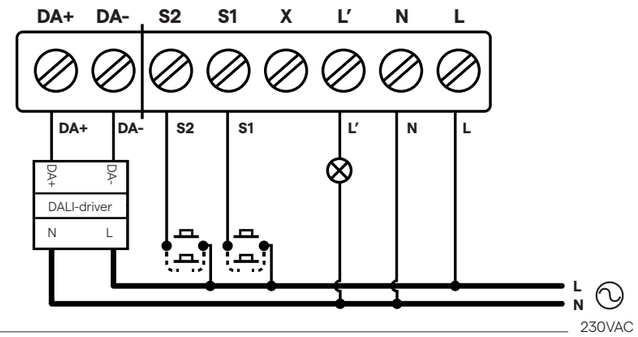

Mounting & strain relief (for recessed mounting of the sensor)

1. Press the plastic part according to the picture until it clicks.

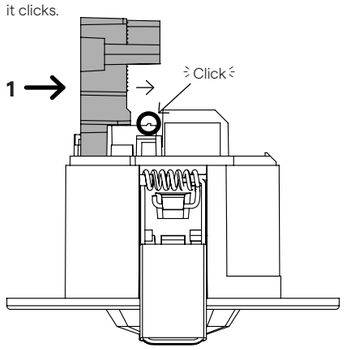

2. Press the plastic part according to the picture until it clicks. Ensure that the plastic hook circled in the picture slides into the pocket on the plastic part.

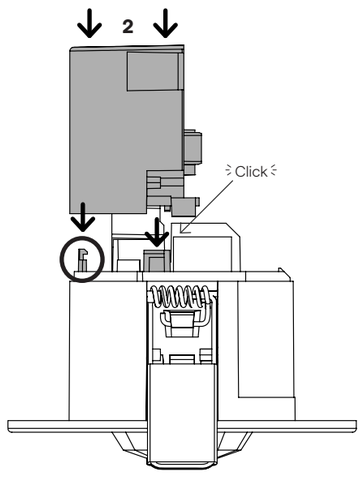

Tip! Use the included cable ties to organize the cables. This is done by inserting the cable tie into one end of the holes so it comes out on the other side.

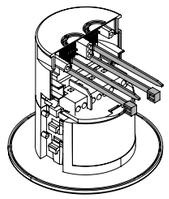

3. Mount the strain relief (fits Ø8mm – Ø13mm outer dimension).

Set the strain relief bracket in the correct direction so it grips the cable dimension you are using.

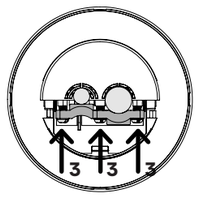

4 .Press out the appropriate hole diameter (pre-punched Ø12 & Ø16mm) for the cable.

Tip! When installing with flex tube, use a pipe coupling to ensure that the flexible conduit is held in place.

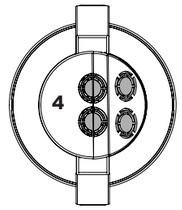

5. Press the plastic part according to the picture until it clicks.

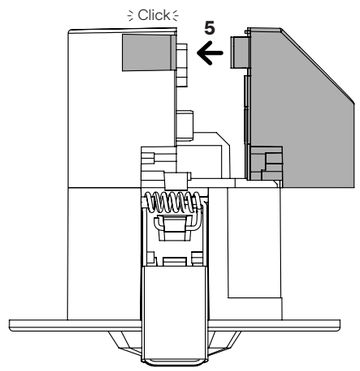

6. Check that all parts are properly assembled and no gaps are visible. Otherwise, press on the affected parts as needed.

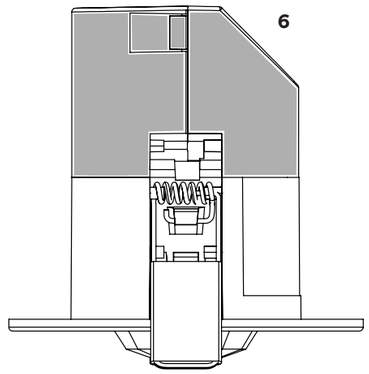

7. Bend up the springs and insert the sensor through the hole.

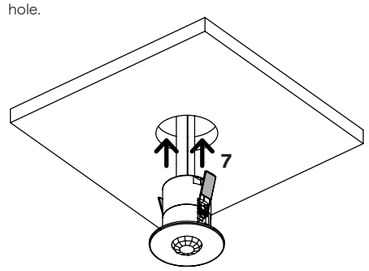

Dimensions (mm)

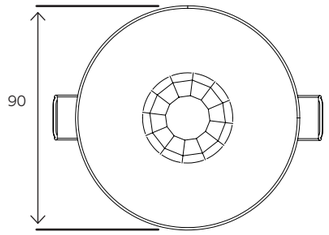

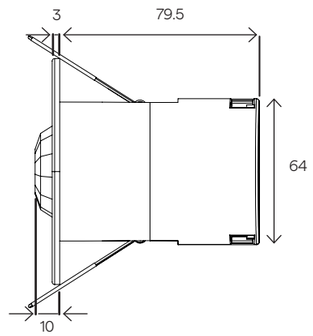

Changing profile

You can change the profile of the sensor by clicking on the unit in the Casambi app under "Nearby devices". The option "Change profile" will then appear.

Profiles:

SRD2PB DALI Broadcast: Simultaneous control of DALI-drivers

SRD2PB DALI 4 groups: Group control of DALI-drivers

SRD2PB DALI 8 groups (No Relay): Group control of DALI-drivers. No relay functionality.

SRD2PB DALI TW DT6: Control one DALI-driver incl. tunable white DT6

SRD2PB DALI TW DT8: Simultaneous control of DALI-drivers incl. tunable white DT8

SRD2PB DALI RGB DT6: Control one DALI-driver incl. colour DT6

SRD2PB DALI RGB DT8: Simultaneous control of DALI-drivers incl. colour DT8

SRD2PB DALI RGBW DT6: Control one DALI-driver incl. colour+white DT6

SRD2PB DALI RGBW DT8: Simultaneous control of DALI-drivers incl. colour+white DT8

SRD2PB DALI RGBTW DT6: Control one DALI-driver incl. colour+tunable white DT6

SRD2PB DALI RGBTW DT8: Simultaneous control of DALI-drivers incl. colour+tunable white DT8

Load

The breaking capacity of 10A applies to resistive load. Different types of loads have different amounts of inrush current at startup and voltage spikes at shutdown. To maximize the lifespan of SRD2PB, the following values in the table below are recommended (provided the installation environment is not too warm).

Load	PF	Effect	VA	Current
Resistive load (resistive heater)	1	2300W	2300VA	10A
Halogen/incandescent 230V	1	1800W	1800VA	7,8A
LED loads	0,9	1000W	1122VA	4,35A
Fluorescent, uncompensated	0,3	430W	1430VA	6.25A
Fluorescent, compensated	0,85	935W	1085VA	5A
Low voltage halogen, electronic	0,8	935W	1085VA	5A
Low voltage halogen, conventional	0,95	740W	740VA	3A
Energy-saving lamps	0,6	300W	500VA	2.5A
Motors and fans	0,7	380W	575VA	2.5A

Heat

SRD2PB is equipped with overheating protection. During longer continuous operation with high load in a warm environment, the sensor will shut off. If the sensor is installed in a warm environment, the relay cannot be loaded to the maximum. Note that long cable lengths will generate more heat due to the cable's resistance.

Range

By using MESH network technology, you only need to be within range (max 30 meters) of one device to control all devices. MESH technology allows you to build large-scale installations with a large number of fixtures and easily control them through, for example, your smartphone. We recommend 10 meters as all installations have different conditions.

Effective range is strongly dependent on the environment and obstacles, such as walls and building materials.

Metal will significantly block the radio signal, so avoid enclosing in metal or placing the unit near large metal structures.

Note that even a Casambi device without load can be used in the network to strengthen network strength through MESH technology.

Designation	SR2PB
Model series	V-sense
Article number	V-44B0306-036Y
E-number	13 020 57
Voltage in	220-240VAC
Frequency in	50Hz, 60Hz
Radio frequencies	2402MHz-2480MHz
Maximum radio frequency effect	8dBm
Standby effect	<0.5W
Lux range	1-999lux
Number of push-button inputs	2
Maximum breaking capacity	10A (cos =1)
Maximum inrush current relay output	130A, 10ms
Memorizes last set position	Yes
Overheating protection	Yes
Mounting	Recessed (surface mounting achieved with accessories sold separately)
Working air humidity	0...80%, non-condensing
Working temperature	-20°C - +35°C
Dimensions (WxH)	90×81mm
Weight	124g
Cable area	1-2.5mm² (28~12AWG)
Cable outer diameter	7mm-13mm
Housing material	PC/ABS
Insulation class	IP20
Enclosure class	II
Approvals	CE, UKCA

VADSBO

EN Installation Manual S20BOX

The S20BOX enables surface-mounted installation of the V-sense SRD2PB and V-sense SR2PB sensors.

Installation procedure

Disassembling the Spring

1. Remove the spring bend from the plastic hook by pressing it downward.

2. Compress the spring from the right side and detach it from the left plastic pin.

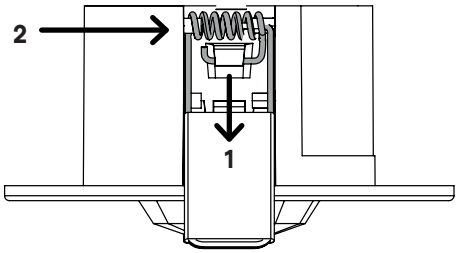

Mount the Mounting Plate in the Ceiling

Tip! The holes are compatible with ceiling and wall mount junction boxes.

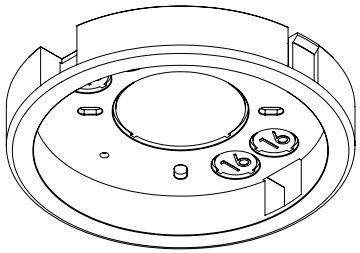

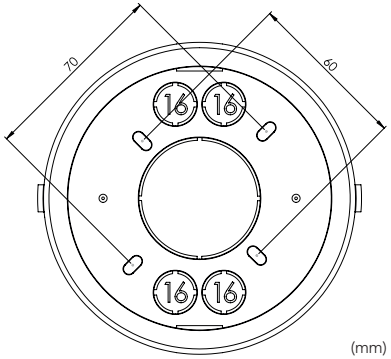

(mm)

Cut out opening for cable

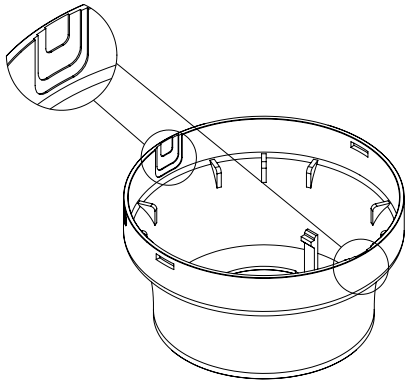

Press the sensor into the box

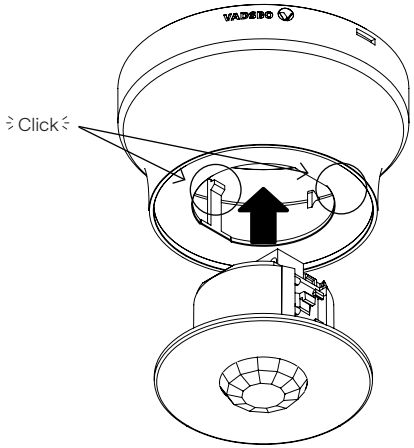

Press the box against the base plate

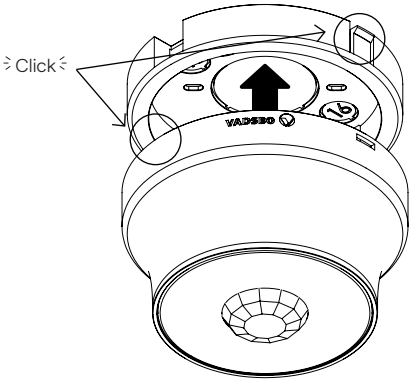

Dimensions (mm)

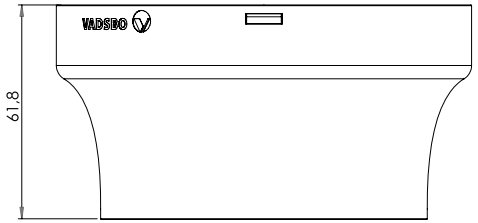

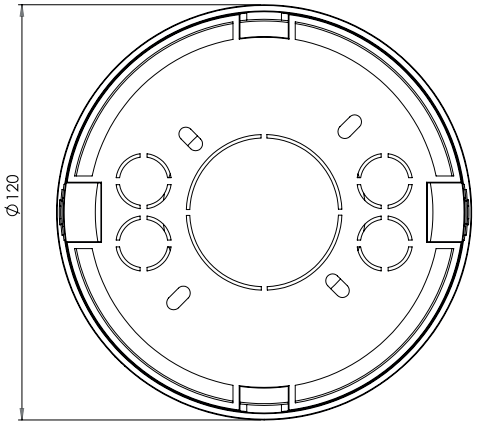

Technical Data

Designation	S20BOX
Model series	V-sense
Article number	V-65F1202-001N
E-number	14 387 01
Mounting	Surface-mounted
Material	PC
Insulation class	IP20
Color	RAL9003
Dimensions (W x H)	120 x 61.8 mm
Cable entry	Cut-outs for 7mm, 13mm, and 16mm 16mm knock-outs for flexible conduit 45mm knock-out for junction box
Ambient temperature	-20 to +35°C
Weight	102g
Flame retardancy	V-0
Approvals	CE

VADSBO

DALI driver discovery process

1. Select the Salvador from the More tab, Gateways section.
2. Select Discovery to open the discovery view.
3. Select the discover (magnifying glass) icon again to start the discovery process.
    a. Discovery may take some time depending on the amount of DALI drivers connected.
4. As each driver is addressed it will be shown in a list on the discovery screen view.
    a. There is an indication at the top left of the discovery view to indicate progress/how many new devices have been discovered/addressed.

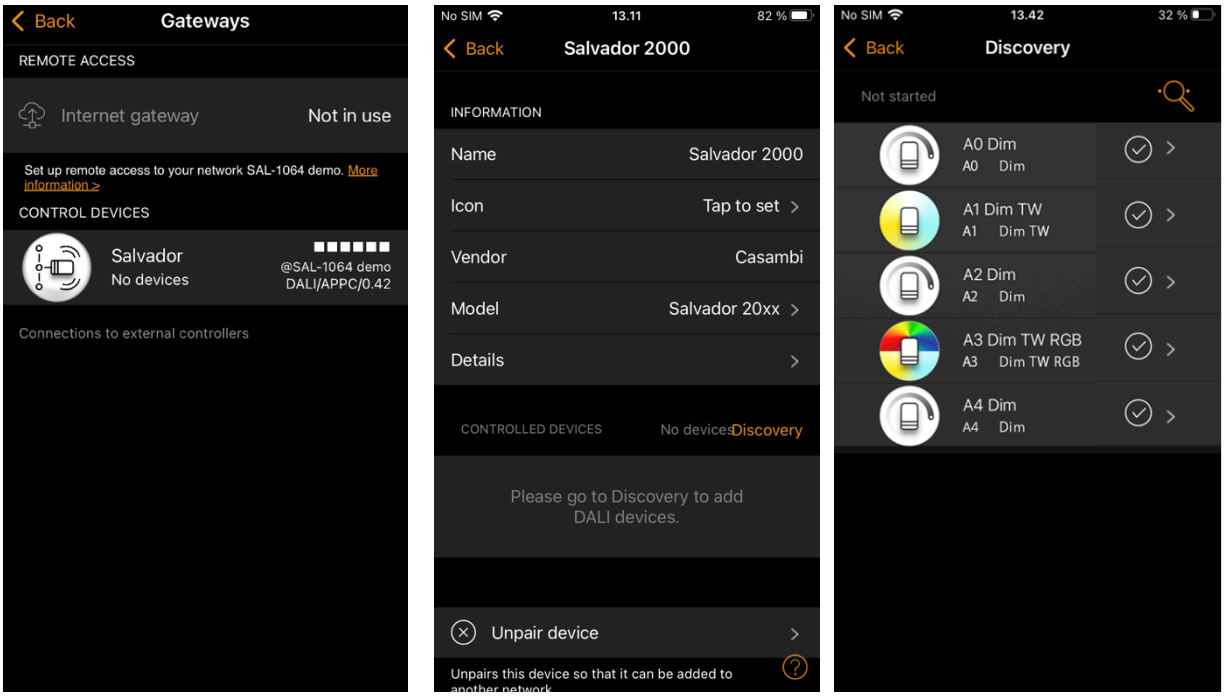

5. When the process has finished, select Confirm to add all discovered drivers to your network.
    a. Icons for each individual DALI driver will then be displayed in the app Luminaires tab.
        i. Each DALI driver shown in the luminaires tab has properties that can be viewed in the same way as any other Casambi device (double tap the icon). It is possible to rename the device, change its icon image and see various other information about it. It is also possible to open the Details section to see various DALI data.
6. You can then control and program the devices in the same way as any other Casambi ready or Casambi enabled luminaire. Please refer to the original app user guide for more information.

Adding additional DALI drivers

If physically adding additional DALI drivers after the initial discovery has been done, you will have to run the discovery process again to address these and add them to your network.

1. Follow the steps described in the section “DALI driver discovery process”.
2. After the process completes you will see a summary of DALI drivers that have already had addressed from a previous discovery and new devices.
3. Confirm to add all discovered drivers to your network.

Removing DALI drivers

If physically removing DALI drivers after the initial discovery has been done, you will have to run the discovery process again to update network configuration.

1. Follow the steps described in the section “DALI driver discovery process”.
2. After the process completes you will see a summary of DALI drivers that are now addressed
3. Confirm to update your network configuration.

Note: “Unpairing” a DALI driver from the luminaires tab is not possible. If attempted, you will be promoted to run the discovery process again.

Offline DALI drivers

The app will indicate if a DALI driver is offline. This may be indicated if the physical DALI connection is broken., or if the driver itself has been powered off.

Unpairing the Salvador

A Salvador can be unpaired from a Casambi network using the same method as any other Casambi ´device. Please see the user guide for more information.

Note that unpairing a Salvador will also remove all DALI luminaires that have been discovered by that Salvador.

